Installation Guide

ARGONICS
ENGINEERED POLYURETHANE

ALUMINUM V-PLOW

Conveyor Belt Cleaning System

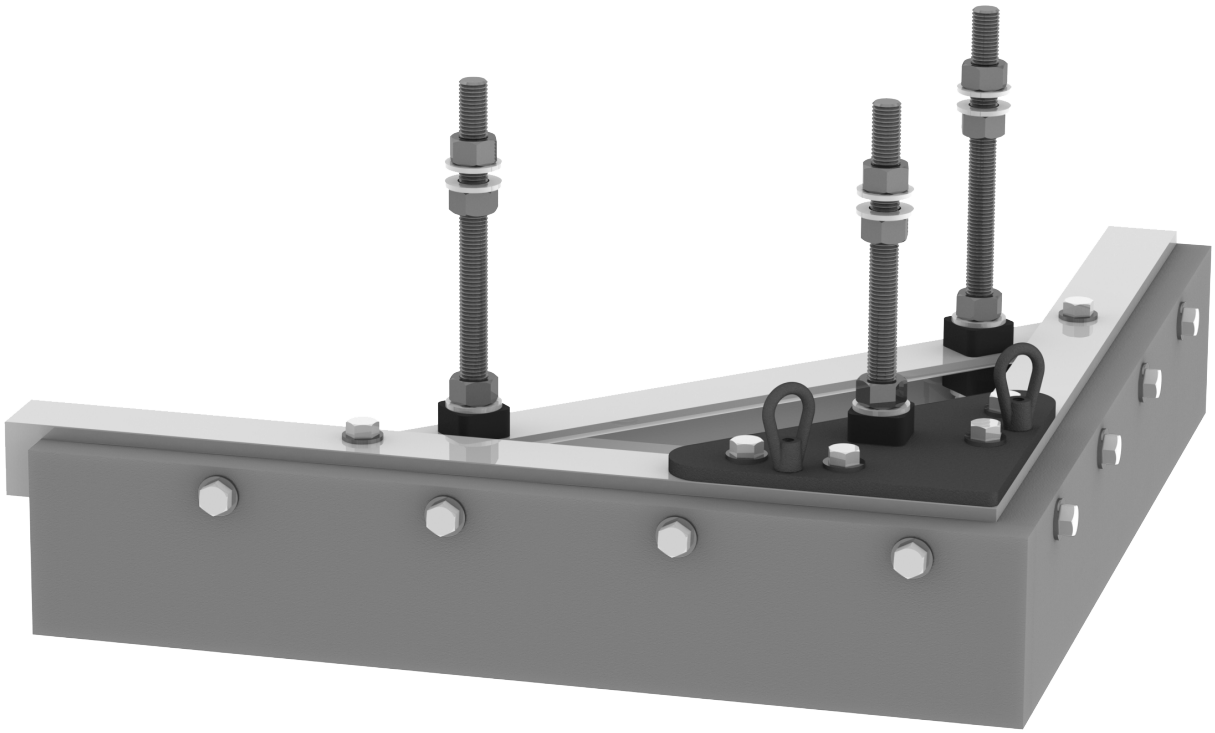

PERFORMANCE SOLUTIONS! PROVEN

LIB-CP-EAP-03-01 Rev. 1

ALUMINUM V-PLOW

⚠WARNING

Always obey all applicable safety rules.
Be sure all power to the conveyor has been disconnected and controls are locked out.

Installation Tools Required

- Tape measure
- Angle Gauge
- Level & Straight Edge
- Scribe or Chalk
- Welder or Drill
- 3/4" End Wrench
- 3/4" Ratchet/Socket
- 1 1/8" End Wrench

Bolts, lock washers and nuts for mounting are not supplied

Assembly Breakdown

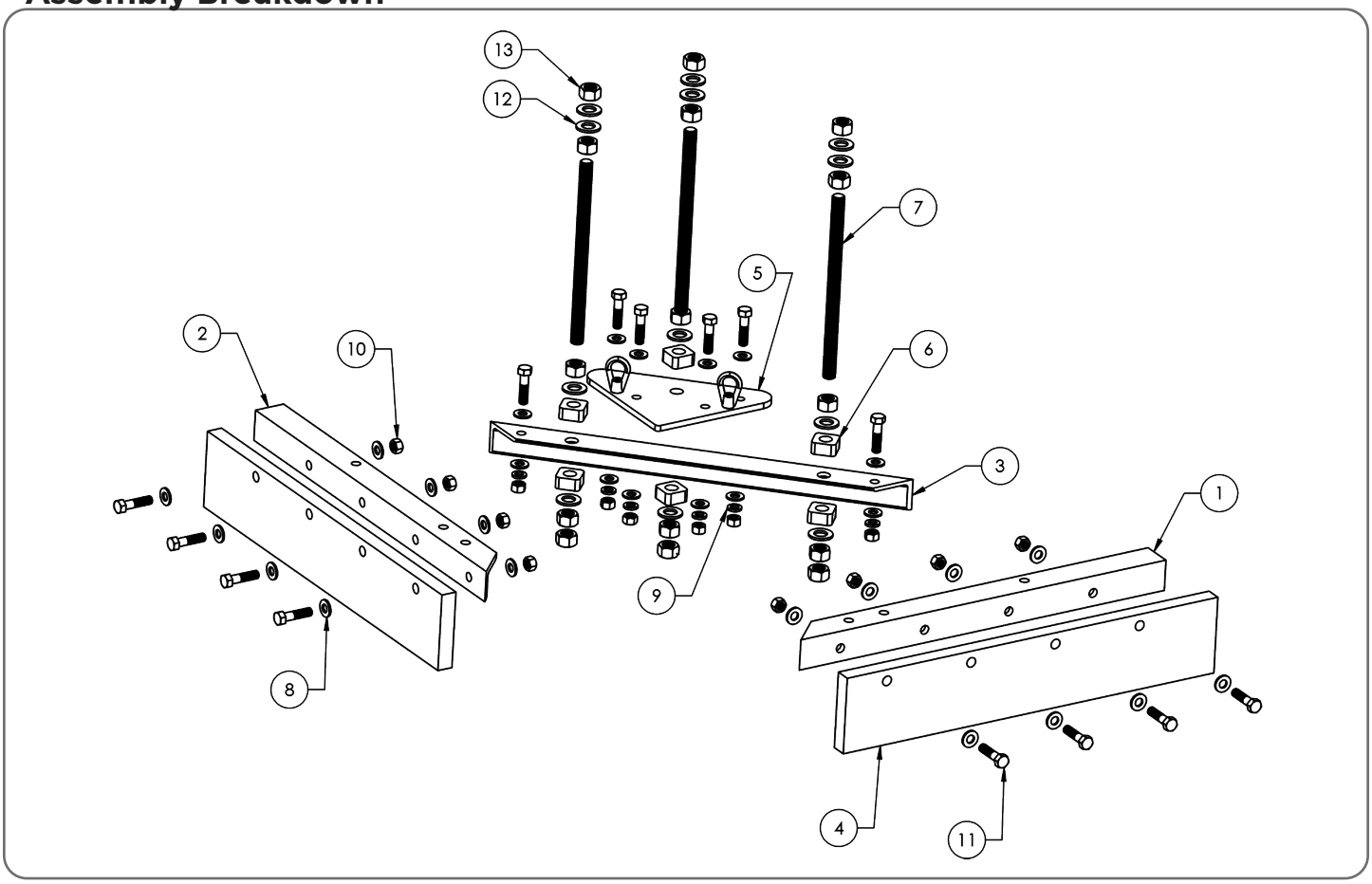

Number	Part Number	Quantity	Description
1	CP-EAP-M"XX"A	1	Mainframe Part A, Right
2	CP-EAP-M"XX"B	1	Mainframe Part B, Left
3	CP-EAP-M"XX"C	1	Mainframe Part C, Center
4	CP-VP-15"XX"-G83	2	Urethane Blade
5	CP-EAP-P3888	1	Side Attachment Plate
6	CP-DAP-P7515-B93	6	Urethane Bushing
7	CP-DAP-P7512	3	3/4" Threaded Rod, 12"
8	WASH-0.50-F-ZINC	varies	1/2" Flat Washer, Zinc
9	WASH-0.5-L-ZINC	varies	1/2" Locking Washer - Zinc
10	NUT-004	varies	Hex Nut 1/2"-UNC
11	BOLT-0.5X2-NC-ZINC	14	Hex Bolt 1/2"-13UNC 2" Long
12	WASH-0.75-F-SAE-ZINC	12	Washer 3/4" Flat - SAE - Zinc
13	NUT-010	15	Hex Nut 3/4" Plain

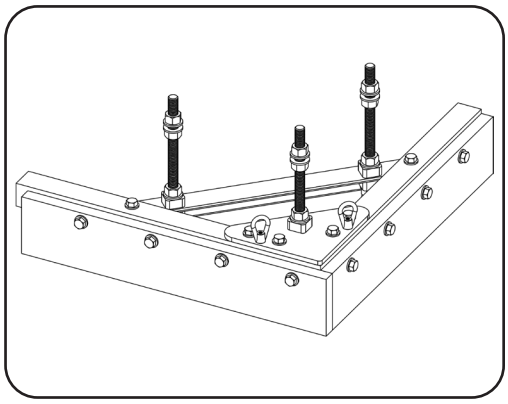

Step One: Set Up

The V-Plow is packaged partially assembled. Follow these steps to finish the assembly:

1. Fasten the Side Attachment Plate to Mainframe Part A and Mainframe Part B with the supplied ½″ bolt assemblies (4).
2. Fasten Mainframe Part C to Mainframe Part A and Mainframe Part B with the supplied ½″ bolt assemblies (2).
3. Remove the ¾″ hex nuts (2), washer (1) and urethane bushing (1) from the end of the threaded rod assemblies. From the top of the V-Plow assembly, locate the remaining parts of the threaded rod assembly into the drilled hole in Mainframe Part C (2 places) and the Side Attachment Plate (1 place). Re-install the urethane bushing (1), washer (1) and ¾″ hex nuts (2). The bottom of the second hex nut (jam nut) should be flush with the bottom of the threaded rod. Mainframe Part C and the Side Attachment Plate should be in-between the urethane bushings.

Step Two: Layout

Begin layout by cleaning any debris from the conveyor belt surface where you will be mounting the V-plow. Using a 90-degree layout tool, draw a line across the entire width of the belt perpendicular to the belt length (see L1 in figure 1). You may need to draw a partial line and then finish it with a straight edge. This line should be no further than 4 feet and no closer than 2 feet from the tail pulley in order to properly protect the pulley from tramp materials (see figure 2). If for some reason you can not mount the V-plow within this area, you must then mount it to the closest available flat return idler, with the distance being no more than 1 foot from the idler.

NOTE: The further you place the V-plow away from the tail pulley, the more likely your pulley will become susceptible to tramp materials.

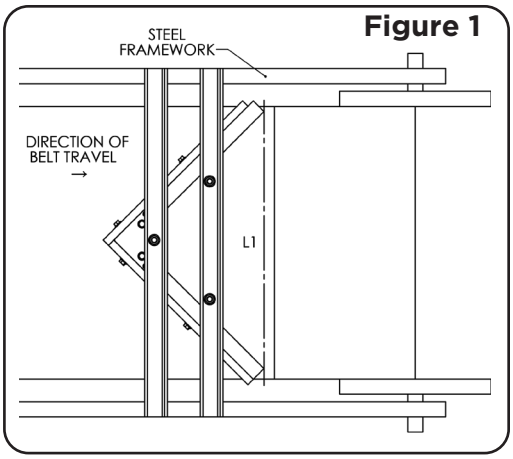

Figure 1

Step Three: Mounting

Place the complete system on top of the belt surface. Be sure the blade is even with the belt edge or extends beyond the belt edge on both sides. Set the tails of the V-Plows "V"-shaped blade even with the L1 line you drew onto the belt in step 2 (see figure 1). Structure will need to be added to support the (3) threaded rods. Notice on Figure 2 the initial mounting location of the hex nut and washer. Fasten the threaded rod assemblies to the structure using the ¾″ hex nuts and washers. There should be a washer and hex nut on both sides of the structure.

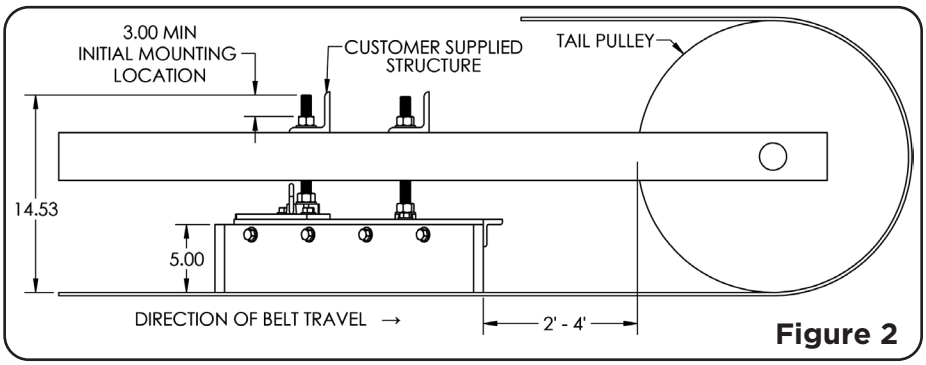

Figure 2

Step Four: Safety Devices

Secure the V-Plow to the conveyor structure by attaching the supplied safety chains to the V-Plow mounting rings (located on the Side Attachment Plate) with the supplied chain links. The opposite end of the chain needs to be secured to the conveyor structure with ~3 inches of slack to allow for future adjustment. ***If these items are not installed properly, you will void any and all warranties associated with this V-plow system.***

Step Five: Tensioning

To adjust the system vertically, use the top (2) hex nuts on each threaded rod assembly to locate the V-Plow assembly as needed.

Installation is now complete.

Installation

THE MOST RELIABLE AND COST-EFFECTIVE SKIRTING AVAILABLE

MADE WITH KRYPTANE® POLYURETHANE

Argonics formulates unique proprietary Kryptane polyurethane materials tailored to meet the demands of your wear application, whether it be sliding or impact abrasion, sticking or corrosion.

BENEFITS OF ARGONICS POLYURETHANE SKIRTING:

- 6 - 10 times the wear life over rubber
- 60% lower coefficient of friction compared to rubber, which reduces drag on conveyor motor
- Will not groove your conveyor belt when installed correctly

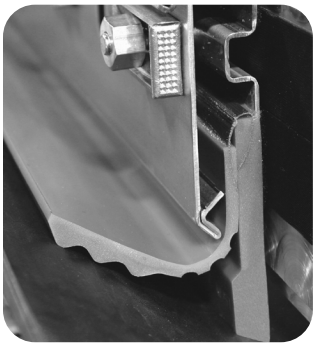

FOLD-N-SEAL™

If you're looking for a quality multi-sealing conveyor skirting solution that isn't hard on your budget, look no further: Fold-n-Seal is your answer.

Fold-n-Seal gives you the best of both worlds: material and dust containment in one unique solution. The primary seal keeps the material where it should be – on the belt. The secondary seal keeps dust and particulate material under control.

SNAP-LOC™ DUST SEAL

Snap-Loc is the gold standard for dust containment skirting. This straight-forward, no-nonsense design for dust control snaps into standard unistrut railing that can be bolted or welded into place.

Snap-Loc Dust Seal is engineered to create a perfect seal that follows the contours and low spots of the belt between trough rollers. No additional adjustments are needed for the life of the seal, saving you in both cost and hours of maintenance.

LOAD ZONE CONTAINMENT SKIRTING

Designed to do one thing and do it well: contain material at the transfer points on your belt line. The extra-rugged reinforced design with ¼″ steel means that our Containment Skirting is extremely effective in reducing spillage, resulting in reduced clean-up labor.

Containment skirting is available with either a flat or 20° beveled edge, and in 60″ and 96″ lengths. Varying heights and thicknesses available.

ARGONICS
ENGINEERED POLYURETHANE
520 9th Street • Gwinn, MI 49841
906.226.9747 800.991.2746 f: 906.226.9779
www.argonics.com

PERFORMANCE SOLUTIONS! PROVEN