Installation Guide

ARGONICS
ENGINEERED POLYURETHANE

BRUSH CLEANER

Conveyor Belt Cleaning System

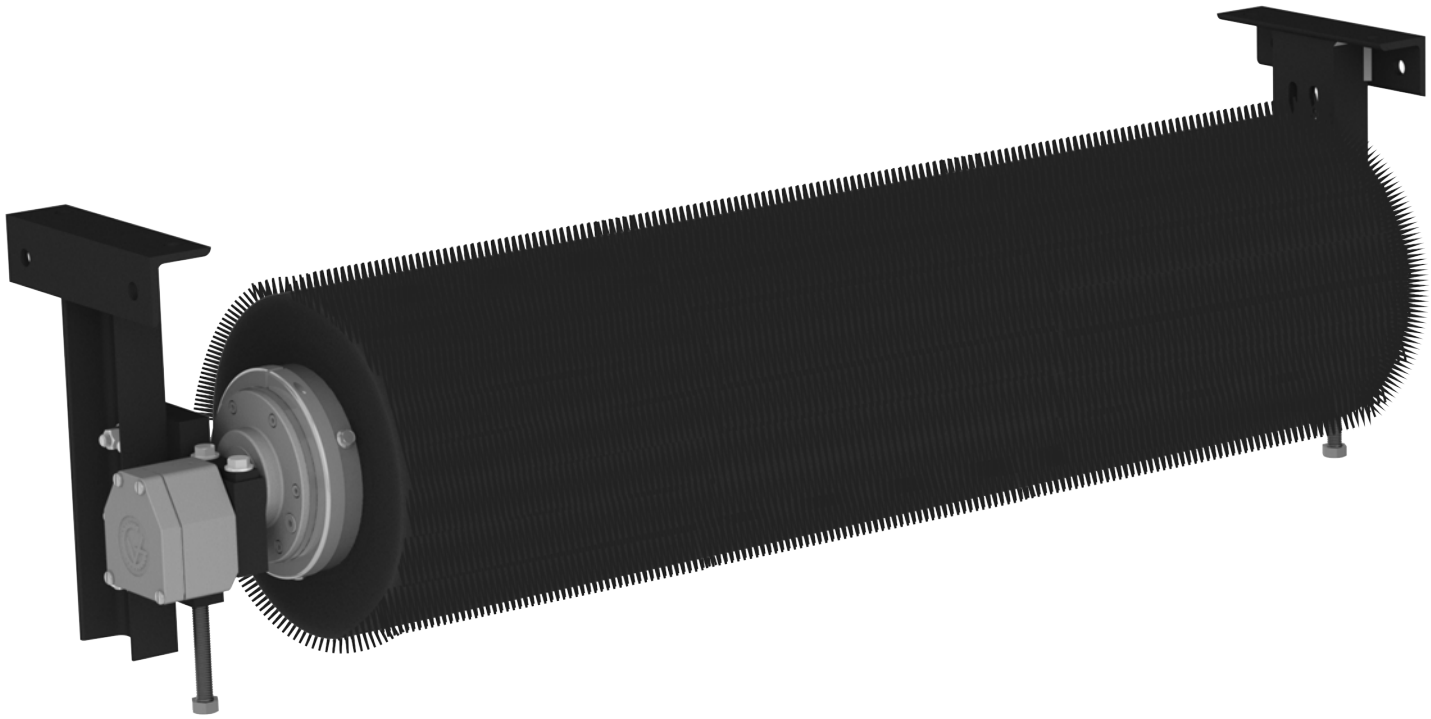

PERFORMANCE SOLUTIONS! PROVEN

LIB-CP-BM-03-01 Rev. 1

BRUSH CLEANER

⚠WARNING

Always obey all applicable safety rules.
Be sure all power to the conveyor has been disconnected and controls are locked out.

Installation Tools Required

- Tape measure
- Cutting torch or Hole saw (3½")
- Level
- Scribe or Chalk
- 9/16" Wrench
- 9/16" Socket & Ratchet
- 3/4" Wrench
- ¾" Socket & Ratchet
- Welder or Drill

Bolts, lock washers and nuts for mounting are not supplied

Assembly Breakdown

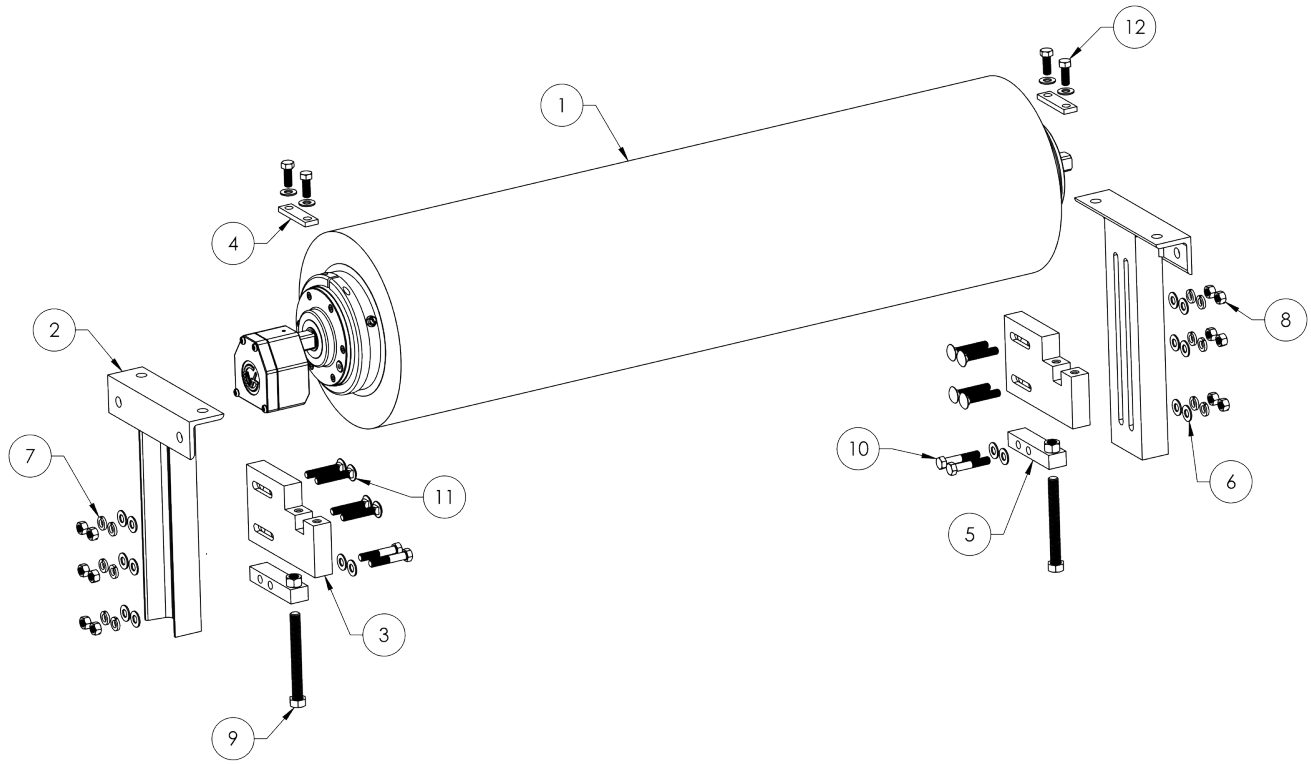

Number	Part Number	Quantity	Description
1	Motorized Pulley Only	1	Motor Assembly
2	CP-BM-P0812A	2	Channel Bracket
3	CP-BM-P0406A	2	Mounting Bracket
4	CP-BM-P0102A	2	Bracket Top
5	CP-BM-P0104A	2	Adjustment Block
6	WASH-0.38-F-SAE-ZINC	20	3/8" Flat Washer - Zinc
7	WASH-0.38-L	12	3/8" Locking Washer
8	NUT-016	12	Nut 3/8"-16UNC - Zinc
9	BOLT-0.5-13X4.5FT-ZINC	2	Hex Bolt 1/2"-13UNC 4-1/2" Long Zinc
10	BOLT-0.38A1.75NC-ZC	4	Hex Bolt - 3/8"-16UNC 1-3/4" Long Zinc
11	BOLT-0.375-16X2CB	8	Carriage Bolt - 3/8"-16UNC 2" Long Zinc
12	BOLT-0.38X1.00NC-ZINC	4	Hex Bolt - 3/8"-16UNC 1.00" Long Zinc

Step 1: Set Up

Determine your mounting method for the system, either bolted or welded directly to the structure (Figure 1) or bolted or welded to a steel plate attached to the structure (Figure 2). Use Figure 3 and the chart below to find the Channel Bracket mounting width (“C” and “D”) for the system being installed. If attaching as in Figure 1, use measurement “C” in the chart below. If mounting to the structure as shown in Figure 2, use measurement “D” below. These measurements are exact and are not adjustable. Reference Figure 4 for the vertical dimensions from the belt for mounting location.

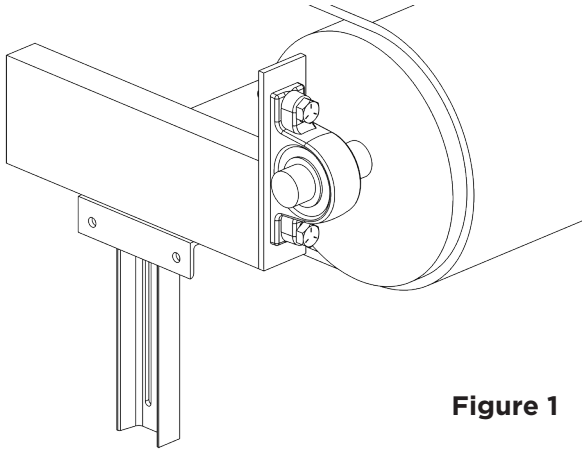

Figure 1

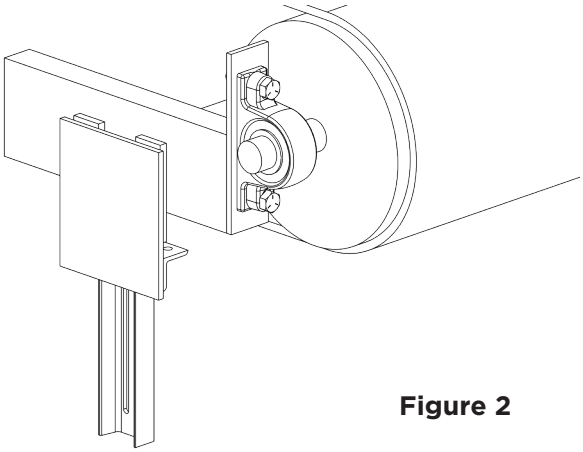

Figure 2

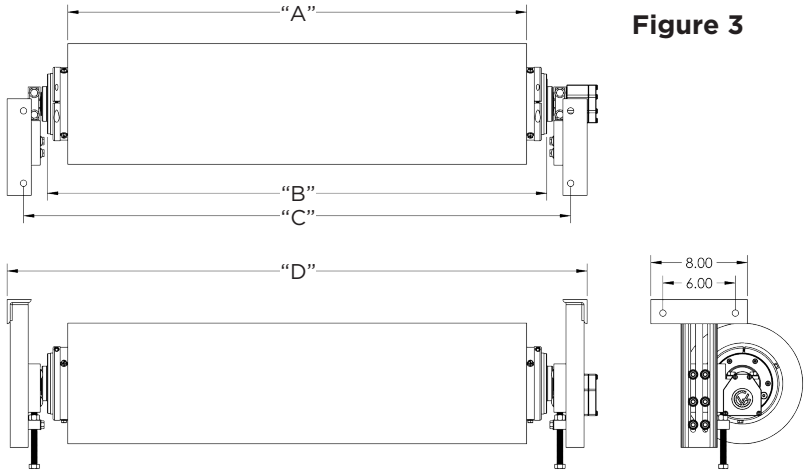

Figure 3

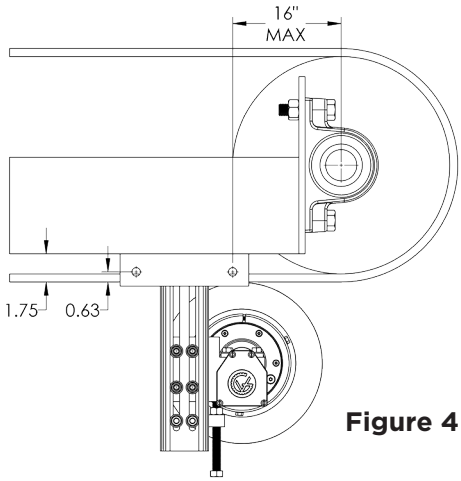

Figure 4

Belt Width		Part Number	“A” Brush Width		“B” Face Width		“C”		“D”	
inches	(mm)		inches	(mm)	inches	(mm)	inches	(mm)	inches	(mm)
24.00	(610)	CP-BM-A24-X-XX-XXX	26.00	(660)	29.50	(749)	33.90	(861)	36.70	(932)
30.00	(762)	CP-BM-A30-X-XX-XXX	32.00	(813)	35.50	(902)	39.80	(1011)	42.60	(1082)
36.00	(914)	CP-BM-A36-X-XX-XXX	38.00	(965)	41.40	(1052)	45.80	(1163)	48.50	(1232)
42.00	(1067)	CP-BM-A42-X-XX-XXX	44.00	(1118)	47.30	(1201)	51.70	(1313)	54.40	(1382)
48.00	(1219)	CP-BM-A48-X-XX-XXX	50.00	(1270)	53.20	(1351)	57.60	(1463)	60.30	(1532)
54.00	(1372)	CP-BM-A54-X-XX-XXX	56.00	(1422)	59.10	(1501)	63.50	(1613)	66.20	(1681)
60.00	(1524)	CP-BM-A60-X-XX-XXX	62.00	(1575)	65.00	(1651)	69.40	(1763)	72.10	(1831)
72.00	(1829)	CP-BM-A72-X-XX-XXX	74.00	(1880)	78.80	(2002)	83.20	(2113)	85.90	(2182)

Installation

Step 2:

Once the location of the Channel Brackets is determined, they can be secured to the conveyor structure. If bolting, use the drilled holes in the bracket to mount to the structure or to a steel plate that is fastened or welded to the structure.

Step 3:

Fasten the Adjustment Blocks to the bottom of the Channel Brackets with the hex nut orientated up as shown in the photo to the right. Thread the ½″ x 4½″ bolt into the hex nut from the bottom.

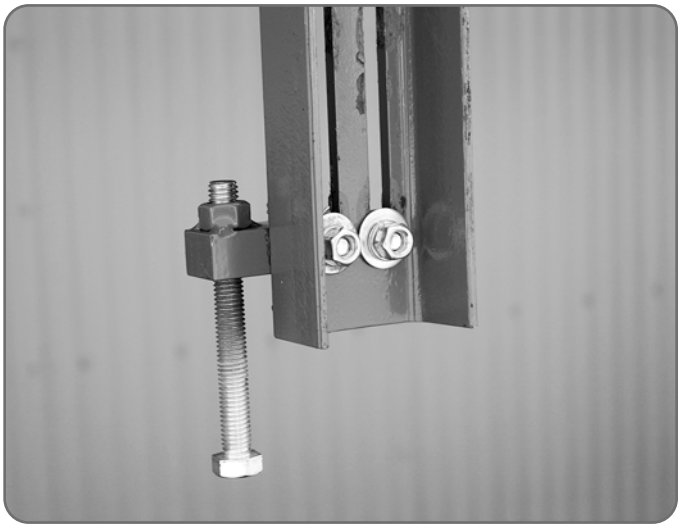

Step 4:

Loosely fasten the Mounting Brackets to the Channel Brackets, making sure that they are in the lowered position.

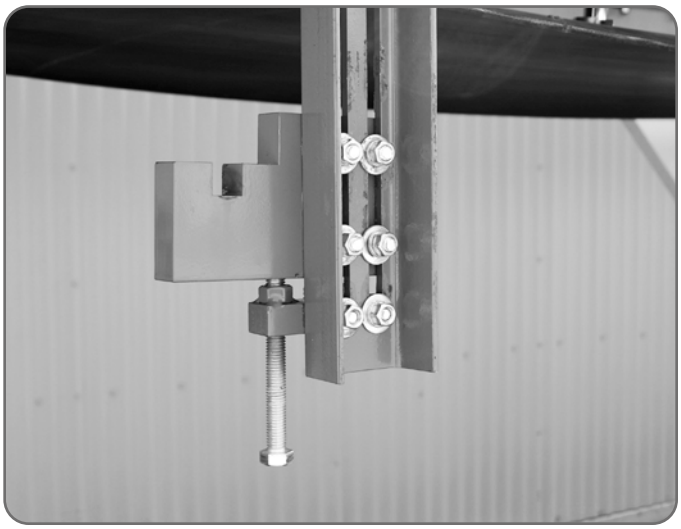

Step 5:

Place the Brush Cleaner Assembly shafts into the Mounting Brackets. Make sure to note the direction that is stamped on the end of the shaft opposite of the junction box. This shows the orientation of the shaft/motor and should be placed pointing up, as marked.

Note:

Argonics and Van der Graaf recommend installing the brush cleaner so that the brush spins in the same direction as the belt, slightly faster than belt speed. This prolongs the life of the cleaner and reduces wear on the belt.

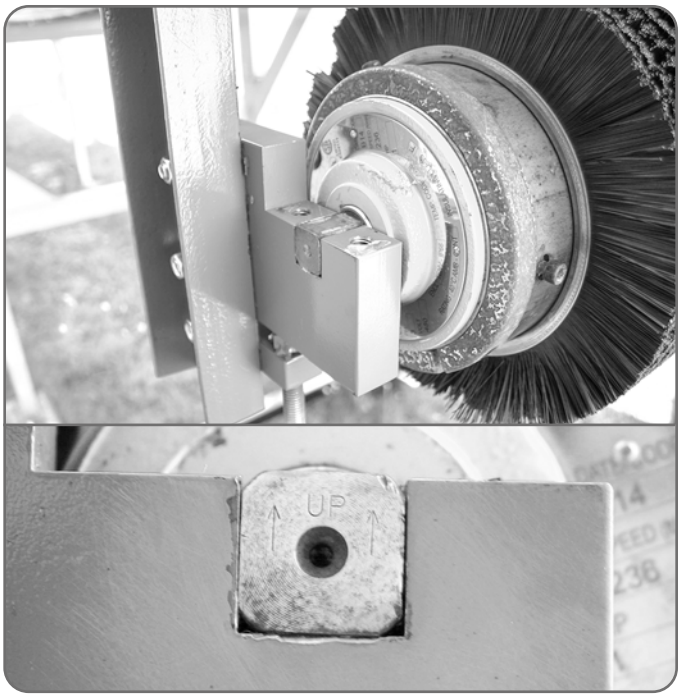

Step 6:

Secure the Brush Cleaner Assembly onto the Mounting Brackets by installing the Bracket Tops.

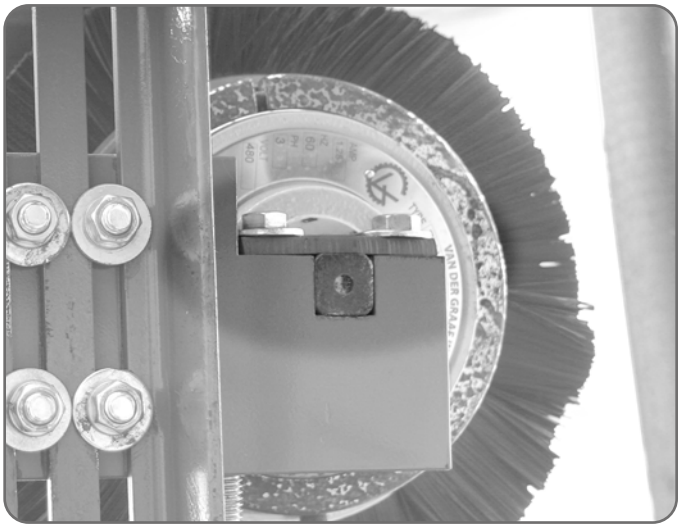

Step 7:

Adjust the tensioning bolt (½″ x 4½″) upward forcing the cleaner to make contact with the belt. Adjust the tension so that there is approximately ¼″ of brush deflection.

Installation

Step 8:

Once the correct tension is achieved, tighten the four hex nuts (on each side) securing the Brush Cleaner Assembly to the Channel Brackets.

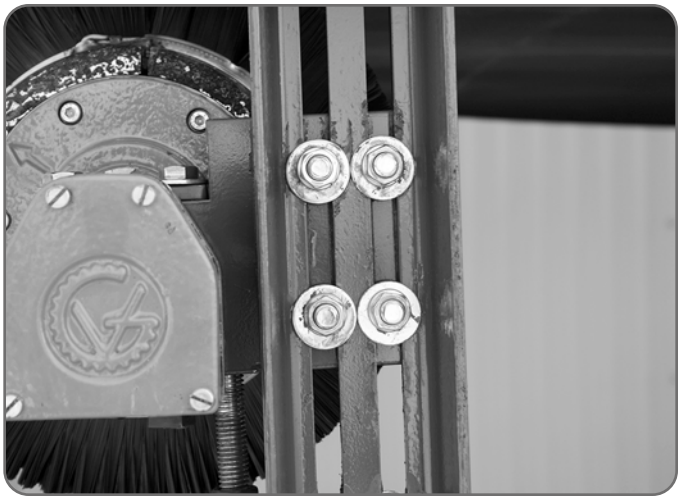

Step 9:

Brush Cleaner mounting is complete! Reference the Van der Graaf Drum Motor Installation Manual for the wiring diagrams needed to complete installation.

The Van der Graaf manual can be found online:
https://www.vandergraaf.com/media/VanderGraaf/site-images/PDFS/DRUM-MOTOR_INSTALL-MANUAL_700-e-2015.pdf?ext=.pdf

Maintenance

Oil Changes

Oil changes are recommended at 50,000 hour intervals.

Instructions on how to perform an oil change can be found on page 11 of the Van der Graaf manual:
https://www.vandergraaf.com/media/VanderGraaf/site-images/PDFS/DRUM-MOTOR_INSTALL-MANUAL_700-e-2015.pdf?ext=.pdf

Brush Replacement

NOTICE: Prior to installing the new brush, move the brush cleaner to the lowest position on the channel bracket. Remove the bracket top, then remove the brush cleaner. Please contact Argonics if you have questions about this process.

Step 1

Begin on the side opposite the junction box. Remove the three bolts from the brush sleeve.

Step 2

Loosen and remove the locking collar; a dead blow hammer or small pry bar may be useful.

Step 3

Repeat step 1; leave the junction box locking collar in place.

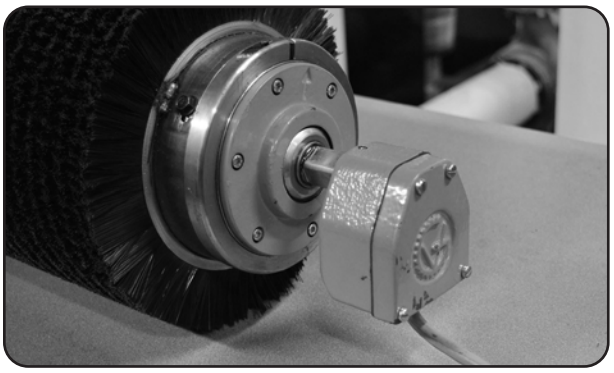

Step 4

Slide the brush sleeve off of the motorized pulley.

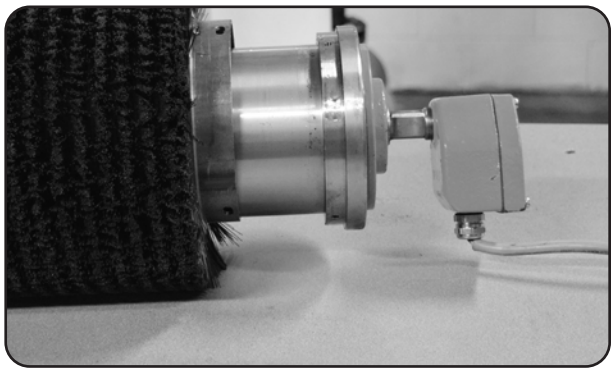

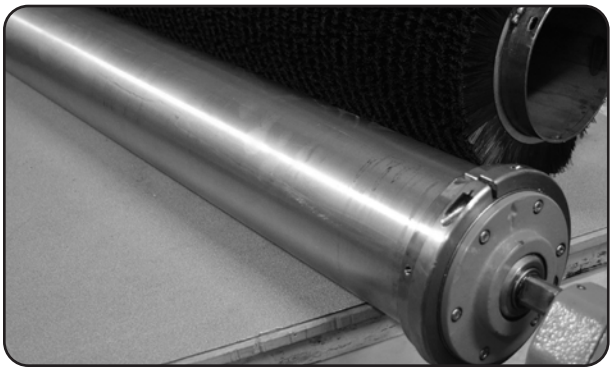

Step 5

Take your new brush and slide it on to the pulley; re-tighten the bolts on the junction box side, re-apply the locking collar, and replace the three bolts on the non-junction box side. Your replacement brush is now installed.

OTHER QUALITY PRODUCTS FROM ARGONICS

THE MOST RELIABLE AND COST-EFFECTIVE SKIRTING AVAILABLE

MADE WITH KRYPTANE® POLYURETHANE

Argonics formulates unique proprietary Kryptane polyurethane materials tailored to meet the demands of your wear application, whether it be sliding or impact abrasion, sticking or corrosion.

BENEFITS OF ARGONICS POLYURETHANE SKIRTING:

- 6 - 10 times the wear life over rubber
- 60% lower coefficient of friction compared to rubber, which reduces drag on conveyor motor
- Will not groove your conveyor belt when installed correctly

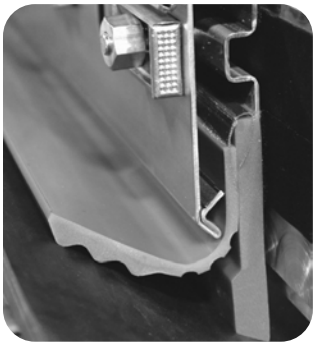

FOLD-N-SEAL™

If you're looking for a quality multi-sealing conveyor skirting solution that isn't hard on your budget, look no further: Fold-n-Seal is your answer.

Fold-n-Seal gives you the best of both worlds: material and dust containment in one unique solution. The primary seal keeps the material where it should be – on the belt. The secondary seal keeps dust and particulate material under control.

SNAP-LOC™ DUST SEAL

Snap-Loc is the gold standard for dust containment skirting. This straight-forward, no-nonsense design for dust control snaps into standard unistrut railing that can be bolted or welded into place.

Snap-Loc Dust Seal is engineered to create a perfect seal that follows the contours and low spots of the belt between trough rollers. No additional adjustments are needed for the life of the seal, saving you in both cost and hours of maintenance.

LOAD ZONE CONTAINMENT SKIRTING

Designed to do one thing and do it well: contain material at the transfer points on your belt line. The extra-rugged reinforced design with ¼″ steel means that our Containment Skirting is extremely effective in reducing spillage, resulting in reduced clean-up labor.

Containment skirting is available with either a flat or 20° beveled edge, and in 60″ and 96″ lengths. Varying heights and thicknesses available.

ARGONICS
ENGINEERED POLYURETHANE
520 9th Street • Gwinn, MI 49841
906.226.9747 800.991.2746 f: 906.226.9779
www.argonics.com

PERFORMANCE SOLUTIONS! PROVEN